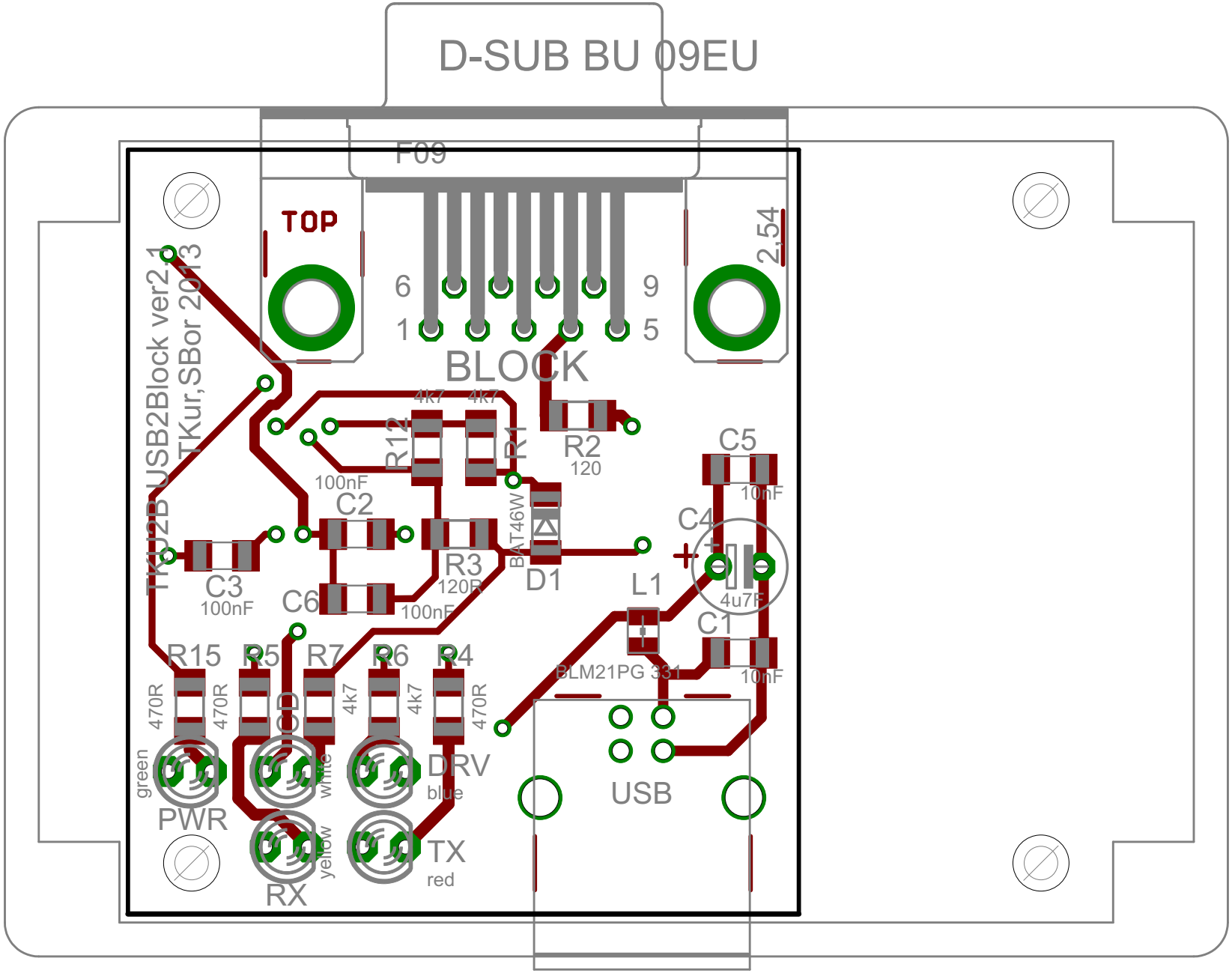

19.09.2013 23:01:09 f=3.00 D:\Sandbox\fremo-block\Hardware\USB2Block\tku2b.brd