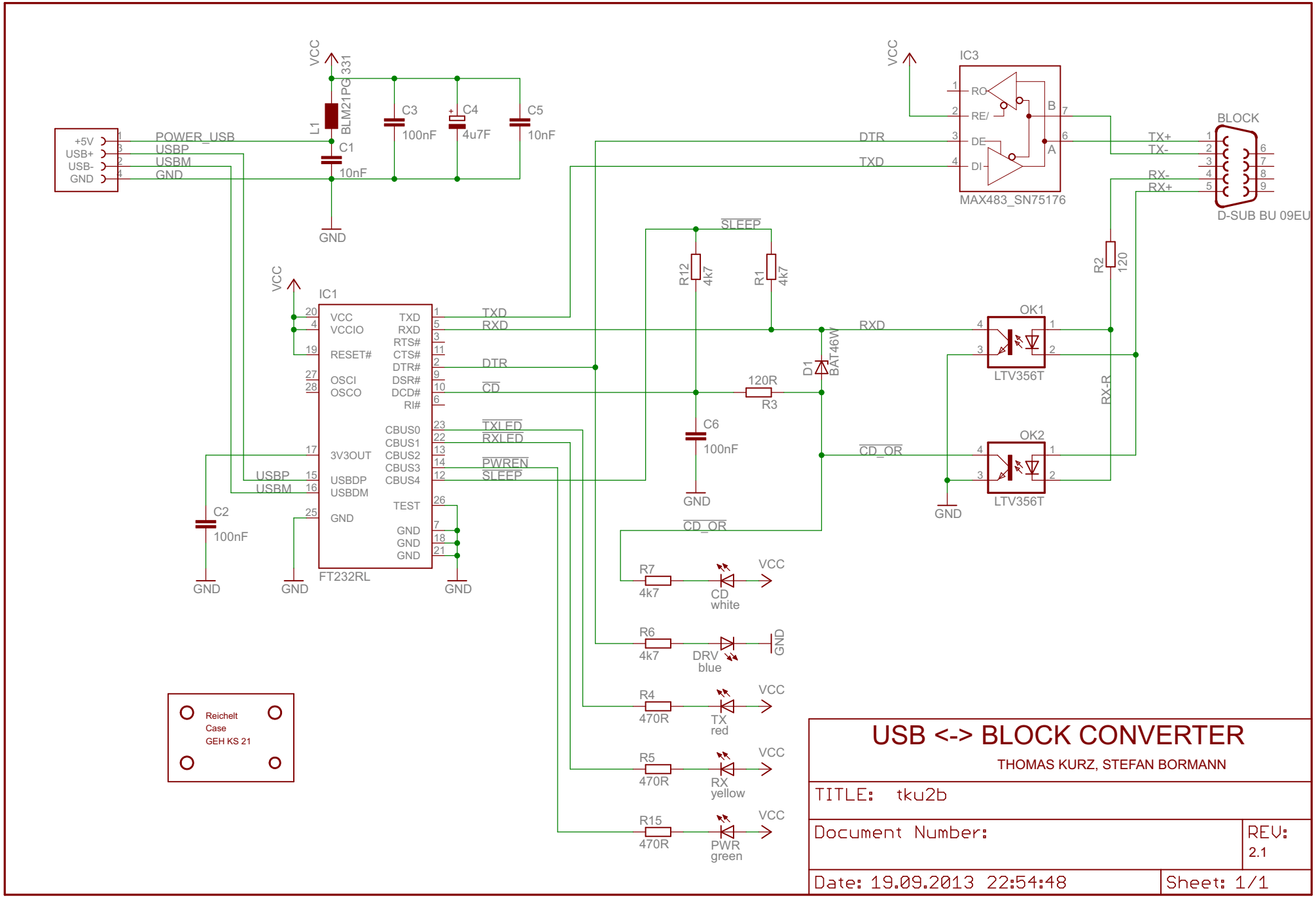

19.09.2013 22:58:10 D:\Sandbox\fremo-block\Hardware\USB2Block\tku2b.sch (Sheet: 1/1)